Submersible Motors

50Hz & 60Hz

CE | *

* for Specific Models

ALGO
PUMPS | MOTORS | DRIVES

Born with Power

www.algopumps.com

AN ISO 9001 & 14001 COMPANY

ALGO Profile

Algo positions itself as not just a pump manufacturing company but as a dependable, technologically sound and one stop solution provider to meet the diverse needs of customers across the globe. Understanding the need of efficient and cost effective pumping solutions and fluid management systems ALGO is established by the veterans having more than 33 years of diversified experience.

To overcome the current challenges in providing energy efficient and complete pumping solutions and meet the requirement of discerning customers ALGO is determined to offer technologically integrated and inventive pumping systems & Solutions at affordable prices.

With the vast experience gained in both domestic and international markets ALGO products are designed and produced with synergy of best in class technologies and processes with international standards. Most of its products are ISI certified and manufacturing facilities are accredited with ISO 9001 & 14001 COMPANY

Algo stays abreast of the major changes worldwide in terms of technology and processes. This combines with the ability to understand customers' requirement allows for the development of products that meet the challenges of tomorrow.

Algo has comprehensive range of products to cater Residential, Agriculture, Building services, Industrial &waste water segments. Algo's highly qualified Engineers and technicians assure satisfactory service at all time

The ability & Impetus of ALGO in product development, Pricing, Promotion, e-commerce strategies will result in sustainable competitive advantages for all stake holders. We at ALGO always strive to focus on current industry trend and meet the next generation pumping requirements.

Vision Mission Values

To provide technologically integrated and ultramodern fluid management systems and solutions for diversified applications at affordable prices and become one of the pump majors globally.

To ensure that we meet all the standards of safety, efficiency, hygiene and environment protection and contribute significantly in developing systems for energy saving.

Our Values are defined by our dedication to Quality, Principles & Integrity that lead to customers' satisfaction all time and ultimate success of the company and its stakeholders.

ALGO Value Proposition

Affordable Price
Longer Life
Greater Performance
Outstanding Service

Quality Policy

We are determined to offer reliable & Innovative products and services with high standards, Dedicated to understand & meet customers' requirements on time.

We are committed to focus on introducing industry best technologies & Concepts to save energy, protect environment and to give high priority for customers' satisfaction all time.

Chairman & Managing Director
ALGO GROUP OF COMPANIES

Index

ALGO
PUMPS | MOTORS | DRIVES

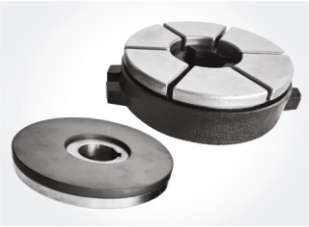

Heavy Duty Thrust Bearing Set

These bearings create a wedge of water between the surface of. the carbon and the stainless steel pivot shoes due to hydrodynamic forces. These bearings are “heavy duty” and will give years of. service with negligible wear.

Oil Seal

The function of the oil seal is to stop whatever fluid is inside from leaking out the clearance between the shaft and housing. The seal may also be used to prevent outside materials, such as dirt, from moving in through the clearance.

Mechanical seal

Mechanical seals are devices that are used to provide a seal at the point of entry or exit of a rotating shaft. Typically it is used to prevent the leakage of one high pressure fluid into a lower pressure fluid.

Radial carbon bearing

which have channels in it's structure that makes it possible to get lubricated by water easily, provides precise bearing of rotor shaft at up and down.

Magnet in Motor Base

In electric motors, the magnet is used to generate rotation using electrical current passing through loops of wire.

Grommet

Nitrile Rubber with SS Washer which protect Motor from Sand going inside from Cable and Grommet giving proper sealing.

Diaphragm

When the diaphragm flexes, the pressure inside the pump lowers, which draws in fluid. Depending on your water pump, the diaphragm might use different methods to flex.

Sand Guard

Guard helps to prevent the sand inside the water of the well entering in mechanical seal and through mechanical seal to inside of the motor.

Up-Thrust ring

Provides safe operation conditions for motor by absorbing Up-Thrust loads with it's machined surface and water channels on it.

Model Nomenclature

XXX +(S)(X)XX XXX

Type of motor
V- Oil Filled
E- Encapsulated Resin filled
A- Water Filled

Nominal Dia in Inches
4=4", 6=6", 10=10"

Material Of Construction
K= CI Top with SS Shell
L= Casted SS410 Construction
C= Cast Iron Top & Bottom
S= Casted SS304
T= Casted SS316

Applicable only for Bolts

Appl. only for spl. requirement
M= Mech Seal Type
P= PT Sensor
H= High temp.(PE2- PA Winding)

Voltage
110V- A, 120V- B, 220V- D, 230V- E, 330V- I, 440V- L, 460V- M, 525V- N

Method of Starting
W: 1Ph- 2W- PSC
M: 1Ph- 3W- CSR
S: 1Ph- 3W- CSCR
T: 3Ph- D.O.L
D: 3Ph- S.D.

Rated Power in kW **(50Hz)**
03- 0.37kW, 15-115kW, 220- 22kW, 320- 220kW, A10- 110kW
Rated Power in HP **(60Hz)**
05- 0.5HP, 20- 2HP, 300- 30HP, A50- 150HP, B50- 250HP

4” Oil Filled Motors

LAVO Series

Technical Specifications		50 Hz	60 Hz
Nominal Dia		4” Motor (100mm)	4” Motor (100mm)
Max. Outer Dia		95mm	3.74 inch
Power Range	1Ph	0.37 to 2.2 kW	0.5 to 3 HP
	3Ph	0.37 to 7.5 kW	0.5 to 10 HP
Version	1Ph	220 / 230 V - 50Hz	110/115/220/230V - 60Hz
	3Ph	380 - 415 V - 50Hz	220/230/380/460V - 60Hz
Nominal Speed		2850 rpm	3450 rpm
Direction of rotation		Counter Clockwise	Counter Clockwise
Protection		IP 68	IP 68
Insulation		Class F	Class F
Duty		S1 continuous	S1 continuous
Max. Submergence Depth		150m	500 ft
Max. Liquid Temp.		33℃	91.4°F
Min. cooling flow		0.15 m/s	0.25 ft/sec
Max. Starts per hour		20 times	20 times
Starting method	1Ph	CSR	PSC/CSR/CSCR
	3Ph	DOL	DOL
Shaft & Mounting		NEMA Standard	NEMA Standard
Cable leadout		Permanently Connected 3 & 4 Core flat cable	Permanently Connected 3 & 4 Core flat cable

Features

- SS304 Motor body to prevent corrosion
- Low power consumption and high operating efficiency
- Pre-filled with food grade oil
- Easy to dismantle and service
- Mounting dimensions as per NEMA standard
- Carbon ceramic Mechanical seal
- Angular contact type lower bearings

Applications

- Domestic, Irrigation, Industries, Sprinkler, Mining, Booster systems, Gardens, Fountains, etc...

Materials of Construction

Part	Material
Motor Shell	SS 304
Motor Shaft	SS 410
Upper Bearing	Ball Bearing
Lower Bearings	Angular Contact Bearing
Lead Cable	PVC / EPDM Rubber Cable
Oil Seal	NBR
Diaphragm	NBR
Mechanical Seal	Carbon / Ceramic

Exploded View

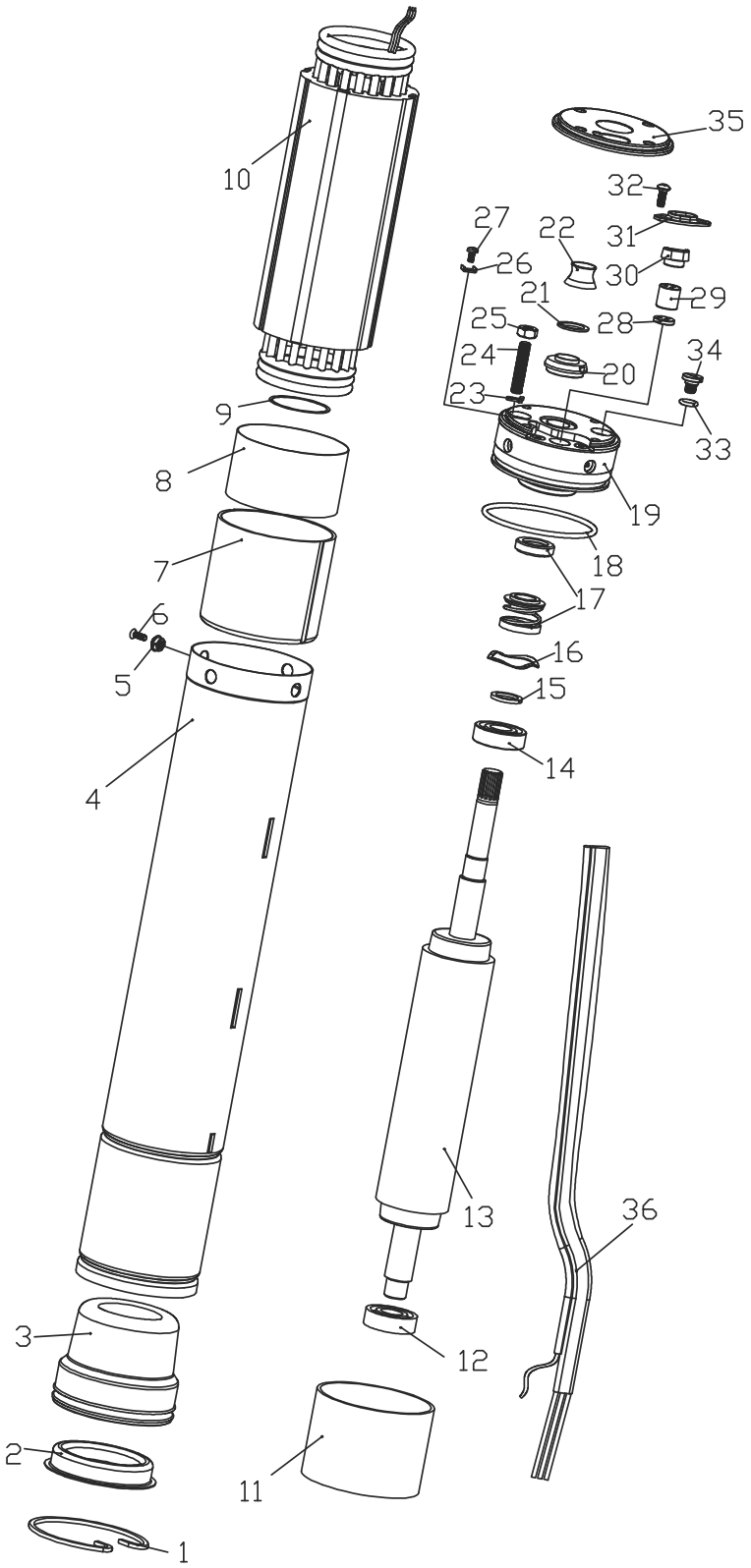

Part No.	Part Name
1	Snap Ring
2	Bottom Cover
3	Diaphragm
4	Motor Shell
5	Washer
6	Screw
7	Lower Bracket
8	Insulating Paper
9	O ring
10	Stator
11	Insulating Paper
12	Lower Bearing
13	Rotor
14	Upper bearing
15	Washer
16	Spring Washer
17	Mechanical Seal
18	O ring
19	Upper Housing
20	Sand Guard
21	Washer
22	Sand Slinger
23	Spring Washer
24	Stud
25	Nut
26	Washer
27	Earth Screw
28	O ring
29	Cable Grommet
30	Cable Grommet Nut
31	Cable Clamp
32	Screw
33	O ring
34	Drain Plug
35	Upper Shell
36	Cable

Technical Details

50Hz, Single Phase 230V, 3 Wire Motor (CSR)

Model	kW	HP	Full load Current (A)	Starting Current (A)	Eff. (%)	P.F. cosØ	Capacitor (MFD)	Torque (Nm)	Thrust Load (N)	Height (mm)	Weight (kg)	Cable Size (Sq mm)	Cable Length (m)
V4K-03M	0.37	0.5	3.6	10.4	53	0.88	15	1.24	1500	357	8	1.5	1.5
V4K-05M	0.55	0.75	4.8	13.6	58	0.89	20	1.84	1500	377	8	1.5	1.5
V4K-07M	0.75	1	6.3	17.6	60	0.9	30	2.5	1500	402	10	1.5	1.5
V4K-11M	1.1	1.5	8.6	21.1	64	0.9	40	3.6	2500	432	11	1.5	1.5
V4K-15M	1.5	2	10	26.4	70	0.94	50	5	2500	475	11	2	1.5
V4K-22M	2.2	3	14	39.9	74	0.96	60	7.35	2500	520	14	2.3	2

50Hz, Three Phase 380V Motor (D.O.L.)

Model	kW	HP	Full load Current (A)	Starting Current (A)	Eff. (%)	P.F. cosØ	Torque (Nm)	Thrust Load (N)	Height (mm)	Weight (kg)	Cable Size (Sq mm)	Cable Length (m)
V4K-03T	0.37	0.5	1.07	5.2	63	0.8	1.24	1500	392	8	1.5	1.5
V4K-05T	0.5	0.75	1.9	9.3	63	0.8	1.84	1500	407	8	1.5	1.5
V4K-07T	0.75	1	2.4	11.1	64	0.81	2.5	1500	427	10	1.5	1.5
V4K-11T	1.1	1.5	3.15	13	88	0.82	3.6	2500	447	11	1.5	1.5
V4K-15T	1.5	2	4.2	19.5	72	0.82	5	2500	482	11	1.5	1.5
V4K-22T	2.2	3	6	28	72	0.83	7.35	2500	542	14	1.5	2
V4K-30T	3	4	7.8	40.2	75	0.83	10	2500	602	19	2	2
V4K-37T	3.7	5	9.6	48	75	0.83	13.4	2500	602	19	2	2
V4K-40T	4	5.5	10	51	77	0.83	13.4	2500	642	21	2	2
V4K-55T	5.5	7.5	13.6	71.1	78	0.85	18.4	4500	762	25	2.3	3
V4K-75T	7.5	10	17.6	87.8	79	0.85	25	4500	882	31	2.3	3

60Hz, Single Phase 115V, 2 Wire Motor (PSC)

Model	kW	HP	Full load Current (A)	Starting Current (A)	Eff. (%)	P.F. cosØ	Capacitor (MFD)	Torque (Nm)	Thrust Load (N)	Height (mm) H	Weight (kg)	Cable Leadout	
												Cable Size (Sq mm)	Cable Length (m)
V4K-S05WB	0.37	0.5	6.8	23.8	56.6	0.86	50	1.02	2000	412	8	1.5	1.5
V4K-S07WB	0.55	0.75	8.7	31	61	0.94	60	1.52	2000	437	8.6	1.5	1.5
V4K-S10WB	0.75	1	11.2	45	65	0.94	80	2.07	2000	457	9.8	1.5	1.5
V4K-S15WB	1.1	1.5	15.7	55	67	0.94	100	3.04	2000	487	11.3	2	1.5
V4K-S20WB	1.5	2	20.2	80	71	0.95	130	4.15	3000	544	13	2.3	1.5

60Hz, Single Phase 230V, 2 Wire Motor (PSC)

Model	kW	HP	Full load Current (A)	Starting Current (A)	Eff. (%)	P.F. cosØ	Capacitor (MFD)	Torque (Nm)	Thrust Load (N)	Height (mm) H	Weight (kg)	Cable Leadout	
												Cable Size (Sq mm)	Cable Length (m)
V4K-S05W	0.37	0.5	3.4	10.8	56.6	0.86	15	1.02	2000	412	7.7	1.5	1.5
V4K-S07W	0.55	0.75	4.2	15	61	0.90	20	1.52	2000	437	8.6	1.5	1.5
V4K-S10W	0.75	1	5.4	21.8	67	0.93	25	2.07	2000	457	9.8	1.5	1.5
V4K-S15W	1.1	1.5	7.2	25.7	71.5	0.94	35	3.04	2000	487	11.3	1.5	1.5
V4K-S20W	1.5	2	9.6	34	75	0.95	40	4.15	3000	544	13	2	1.5

60Hz, Single Phase 115V, 3 Wire Motor (CSR)

Model	kW	HP	Full load Current (A)	Starting Current (A)	Eff. (%)	P.F. cosØ	Capacitor (MFD)	Torque (Nm)	Thrust Load (N)	Height (mm) H	Weight (kg)	Cable Leadout	
												Cable Size (Sq mm)	Cable Length (m)
V4K-S10SB	0.75	1	12.9	46	65	0.98	60	2.07	1500	380	8	2	1.5
V4K-S15SB	1.1	1.5	14.9	58	67	0.98	80	3.04	1500	400	9	2	1.5

ALGO PUMPS | MOTORS | DRIVES

Technical Details

60Hz, Single Phase 230V, 3 Wire Motor (CSCR)

Model	kW	HP	Full load Current (A)	Starting Current (A)	Eff. (%)	P.F. cosØ	Capacitor (MFD)	Torque (Nm)	Thrust Load (N)	Height (mm) H	Weight (kg)	Cable Leadout	
												Cable Size (Sq mm)	Cable Length (m)
V4K-S05S	0.37	0.5	5.5	22.5	48	0.90	12	1.24	1500	357	8	1.5	1.5
V4K-S07S	0.55	0.75	6.3	28	53	0.94	15	1.84	1500	377	8	1.5	1.5
V4K-S10S	0.75	1	7.6	36	54	0.93	20	2.50	1500	402	9	1.5	1.5
V4K-S15S	1.1	1.5	9.4	46	58	0.96	25	3.60	2500	432	11	1.5	1.5
V4K-S20S	1.5	2	12	59	63	0.97	30	5.00	2500	475	12	2	1.5
V4K-S30S	2.2	3	15.6	90	69	0.98	40	7.35	2500	520	14	2.3	2

60Hz, Three Phase 220/230V Motor (D.O.L.)

Model	kW	HP	Full load Current (A)	Starting Current (A)	Eff. (%)	P.F. cosØ	Torque (Nm)	Thrust Load (N)	Height (mm) H	Weight (kg)	Cable Leadout	
											Cable Size (Sq mm)	Cable Length (m)
V4K-S05TD	0.37	0.5	3.4	18	63	0.77	1.24	1500	410	7.8	1.5	1.5
V4K-S07TD	0.55	0.75	4.4	24	68	0.77	1.84	1500	410	7.8	1.5	1.5
V4K-S10TD	0.75	1	5	28	70	0.80	2.50	1500	430	8.8	1.5	1.5
V4K-S15TD	1.1	1.5	6.3	35	72	0.82	3.60	2500	450	9.6	1.5	1.5
V4K-S20TD	1.5	2	7.9	44	74	0.82	5.00	2500	480	11.4	1.5	1.5
V4K-S30TD	2.2	3	10.8	58	78	0.83	7.35	2500	540	13.8	1.5	2
V4K-S40TD	3	4	14.2	63	76	0.82	10.00	2500	602	18.1	2	2
V4K-S50TD	3.7	5	16.2	71	77	0.82	13.40	4500	650	20.1	2	2
V4K-S55TD	4	5.5	17	90	78	0.85	13.40	4500	650	20.1	2	2
V4K-S75TD	5.5	7.5	23.4	102	78	0.84	18.40	4500	762	26.2	2.3	3
V4K-S100TD	7.5	10	31.5	140	80	0.86	25.00	4500	880	32.6	2.3	3

60Hz, Three Phase 380V Motor (D.O.L.)

Model	kW	HP	Full load Current (A)	Starting Current (A)	Eff. (%)	P.F. cosØ	Torque (Nm)	Thrust Load (N)	Height (mm) H	Weight (kg)	Cable Leadout	
											Cable Size (Sq mm)	Cable Length (m)
V4K-S05T	0.37	0.5	1.9	9	68	0.77	1.24	1500	410	7.8	1.5	1.5
V4K-S07T	0.55	0.75	2.6	9	68	0.77	1.84	1500	410	7.8	1.5	1.5
V4K-S10T	0.75	1	2.9	13	70	0.80	2.50	1500	430	8.8	1.5	1.5
V4K-S15T	1.1	1.5	3.6	17	72	0.82	3.60	2500	450	9.6	1.5	1.5
V4K-S20T	1.5	2	4.6	22	74	0.82	5.00	2500	480	11.4	1.5	1.5
V4K-S30T	2.2	3	6.2	26	78	0.83	7.35	2500	540	13.8	1.5	2
V4K-S40T	3	4	8.3	38	77	0.82	10.00	2500	602	18.1	2	2
V4K-S50T	3.7	5	9.4	44	77	0.82	13.40	4500	650	20.1	2	2
V4K-S55T	4	5.5	9.9	56	78	0.85	13.40	4500	650	20.1	2	2
V4K-S75T	5.5	7.5	13.5	61	78	0.84	18.40	4500	762	26.2	2.3	3
V4K-S100T	7.5	10	18.2	90	80	0.86	25.00	4500	880	32.6	2.3	3

60Hz, Three Phase, 460V Motor (D.O.L.)

Model	kW	HP	Full load Current (A)	Starting Current (A)	Eff. (%)	P.F. cosØ	Torque (Nm)	Thrust Load (N)	Height (mm) H	Weight (kg)	Cable Leadout	
											Cable Size (Sq mm)	Cable Length (m)
V4K-S10TM	0.75	1	1.8	8	70	0.80	2.50	1500	388	9	1.5	1.5
V4K-S15TM	1.1	1.5	2.5	11.8	72	0.82	3.60	2500	408	10	1.5	1.5
V4K-S20TM	1.5	2	3.2	15.3	74	0.82	5.00	2500	443	11	1.5	1.5
V4K-S30TM	2.2	3	4.6	19.3	78	0.83	7.35	2500	503	14	1.5	2
V4K-S40TM	3	4	5.8	26.5	77	0.82	10.00	2500	563	19	2	2
V4K-S50TM	3.7	5	7	32.7	77	0.82	13.40	4500	603	19	2	2
V4K-S55TM	4	5.5	7.5	27.2	78	0.85	13.40	4500	603	21	2	2
V4K-S75TM	5.5	7.5	10.3	46.5	78	0.80	18.40	4500	703	25	2.3	3
V4K-S100TM	7.5	10	13.8	68.2	80	0.86	25.00	4500	823	31	2.3	3

4” Encapsulated Resin Filled Motors

ERNA Series

Technical Specifications		50 Hz	60 Hz
Nominal Dia		4” Motor (100mm)	4” Motor (100mm)
Max. Outer Dia		96mm	3.74 inch
Power Range	1Ph	0.37 to 2.2 kW	0.5 to 3 HP
	3Ph	0.37 to 7.5 kW	0.5 to 10 HP
Version	1Ph	220 / 230 V - 50Hz	110/115/220/230V - 60Hz
	3Ph	380 - 415 V - 50Hz	220/230/380/460V - 60Hz
Nominal Speed		2850 rpm	3450 rpm
Direction of rotation		Counter Clockwise	Counter Clockwise
Protection		IP 68	IP 68
Insulation		Class B	Class B
Duty		S1 continuous	S1 continuous
Max. Submergence Depth		300m	1000 ft
Max. Liquid Temp.		33°C	91.4°F
Min. cooling flow		0.15 m/s	0.25 ft/sec
Starting method	1Ph	CSCR	CSCR
	3Ph	DOL	DOL
Shaft & Mounting		NEMA Standard	NEMA Standard
Cable leadout		3 & 4 Core TPI flat cable	3 & 4 Core TPI flat cable

Materials of Construction	
Part	**Material**
Motor Shell	SS 304
Motor Base	SS 304
Motor Shaft	SS 410
Radial Bearings	Carbon Sleeve
Thrust Bearing	Carbon SS Kingsbury Type
Cable Leadout	XPLE / PVC Cable
Cable Sealing	Epoxy
Sand Slinger	NBR
Diaphragm	NBR
Seal	NBR

Cross Sectional View

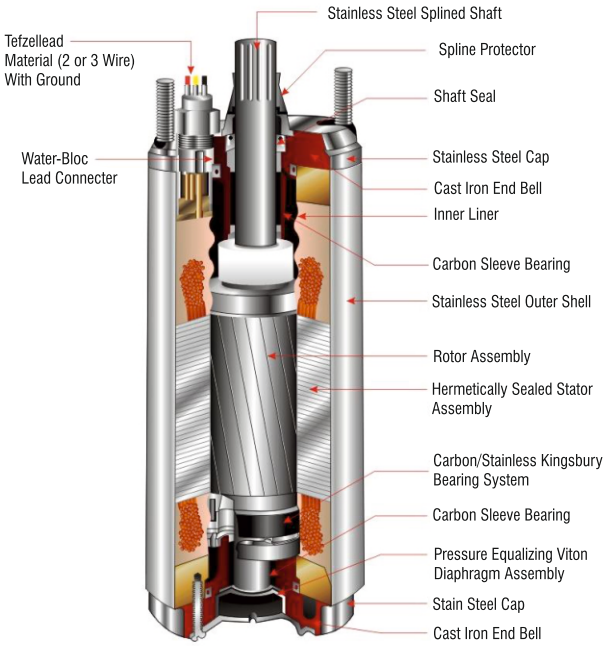

Exploded View

Up to 3HP

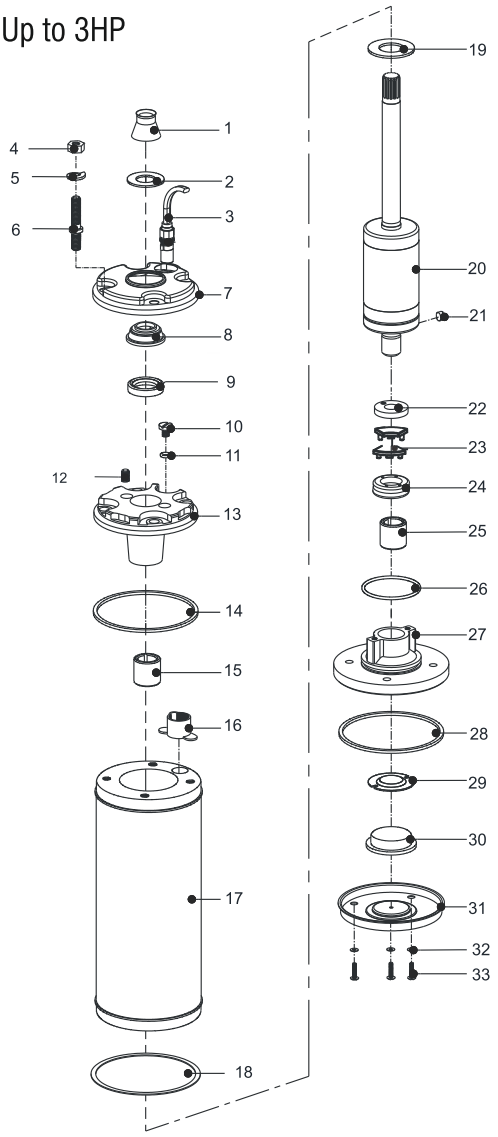

3HP & Above

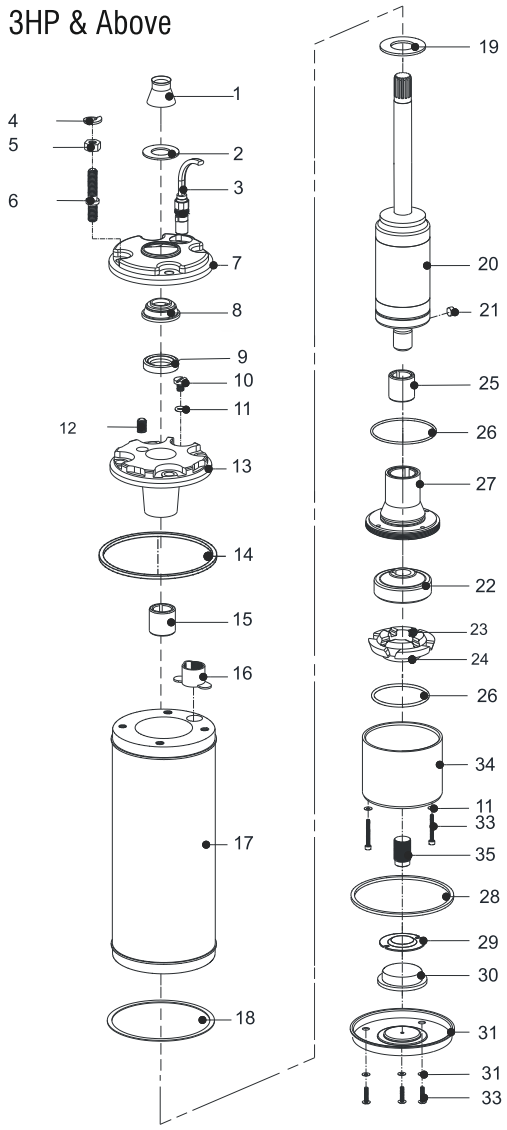

Part No.	Part Name
1	Sand guard
2	Sand guard washer
3	Cable
4	Nut
5	Spring Washer
6	Stud
7	Shell
8	Sand Slinger
9	Oil Seal
10	Drain Plug
11	O ring
12	Vent Plug
13	Upper Housing
14	Gasket
15	Carbon Bush
16	Cable Clamp
17	Stator
18	Gasket

Part No.	Part Name
19	Up thrust washer
20	Rotor
21	key
22	Thrust pad
23	Thrust Segment
24	Thrust Base
25	Bush
26	O ring
27	Lower Housing
28	Gasket
29	Guide Plate
30	Diaphragm
31	Motor Base
32	Washer
33	Screw
34	Thrust Base Housing
35	Rocker Screw

Technical Details

50Hz, Single Phase 230V, 2 Wire Motor (PSC)

Model	kW	HP	Full load Current (A)	Starting Current (A)	Eff. (%)	P.F. cosØ	Capacitor (MFD)	Torque (Nm)	Thrust Load (N)	Height (mm)	Weight (kg)	Cable Size (Sq mm)	Cable Length (m)
E4K-03W	0.37	0.5	3.5	11	52	0.92	25	1.23	1500	291	9	1.5	1.5
E4K-05W	0.55	0.75	4.7	16	58	0.92	30	1.86	1500	319	10.3	1.5	1.5
E4K-07W	0.75	1	6	18.5	61	0.93	35	2.65	3000	348	11.3	1.5	1.5
E4K-11W	1.1	1.5	8	23	68	0.93	45	3.8	3000	396	14	1.5	1.5

50Hz, Single Phase 230V, 3 Wire Motor (CSCR)

Model	kW	HP	Full load Current (A)	Starting Current (A)	Eff. (%)	P.F. cosØ	Starting Capacitor (MFD)	Running Capacitor (MFD)	Torque (Nm)	Thrust Load (N)	Height (mm)	Weight (kg)	Cable Size (Sq mm)	Cable Length (m)
E4K-03S	0.37	0.5	4.3	15	55	0.72	60/250V	10	1.24	1500	241	8.1	1.5	1.5
E4K-05S	0.55	0.75	6.5	23	58	0.69	80/250V	10	1.86	1500	269	9.5	1.5	1.5
E4K-07S	0.75	1	7.6	29	62	0.73	80/250V	15	2.47	3000	298	10.4	1.5	1.5
E4K-11S	1.1	1.5	9.4	46	65	0.87	100/250V	20	3.75	3000	345	13.2	1.5	1.5
E4K-15S	1.5	2	11	53	68	0.88	125/250V	30	4.98	3000	384	14.6	1.5	1.5
E4K-22S	2.2	3	16	68	66	0.96	200/250V	45	10.6	6500	531	23	1.5	2

50Hz, Three Phase 380V Motor (D.O.L.)

Model	kW	HP	Full load Current (A)	Starting Current (A)	Eff. (%)	P.F. cosØ	Torque (Nm)	Thrust Load (N)	Height (mm)	Weight (kg)	Cable Size (Sq mm)	Cable Length (m)
E4K-03T	0.37	0.5	1.2	4.9	66	0.78	1.24	1500	224	7.2	1.5	1.5
E4K-05T	0.5	0.75	1.7	7.8	66	0.8	1.84	1500	241	8.1	1.5	1.5
E4K-07T	0.75	1	2.1	10.6	67	0.81	2.5	3000	269	9	1.5	1.5
E4K-11T	1.1	1.5	3.2	14	70	0.79	3.6	3000	298	10.4	1.5	1.5
E4K-15T	1.5	2	4	21	75	0.83	5	3000	345	13.2	1.5	1.5
E4K-22T	2.2	3	6	28	76	0.83	7.35	6500	454	18.2	2	2
E4K-30T	3	4	7.6	42	76	0.85	10	6500	496	20	2	2
E4K-37T	3.7	5	9.5	46	75	0.84	13.4	6500	531	23	2	2
E4K-40T	4	5.5	10.5	55	76	0.84	13.4	6500	556	24	2	2
E4K-55T	5.5	7.5	13	70	75	0.86	18.4	6500	686	30	2	3
E4K-75T	7.5	10	18.7	100	76	0.82	25	6500	756	34	2	3

Technical Details

60Hz Single Phase 110/115V, 2 Wire Motor (PSC)

Model	HP	S.F	Full Load		Max. S.F. Load		Efficiency %		Power Factor %		Locked RotorAmps	Capacitor Value (μF)	Max. Down Thrust load (lbs)
			A	W	A	W	S.F.	F.L.	S.F.	F.L.			
E4K-S05WB	0.5	1.6	7.1	753	9.2	980	60	50	97	97	32	50/250V	300
E4K-S07WB	0.75	1.5	10	1100	12.7	1395	61	52	99	99	43	60/250V	300
E4K-S10WB	1	1.4	12.1	1313	15	1640	64	57	98	99	55	80/250V	650

60Hz Single Phase 110/115V, 3 Wire Motor (CSCR)

Model	HP	S.F	Full Load		Max. S.F. Load		Efficiency %		Power Factor %		Locked RotorAmps	Capacitor Value (μF)		Max. Down Thrust load (lbs)
			A	W	A	W	S.F.	F.L.	S.F.	F.L.		Start	Run	
E4K-S05SB	0.5	1.6	8.5	760	11.5	1120	54	50	88	82	36	125	20/250V	300
E4K-S07SB	0.75	1.5	10.3	1027	14.5	1450	57	55	91	90	46	125	30/250V	300
E4K-S10SB	1	1.4	12	1186	16	1620	64	63	93	90	58	150	40/250V	650

60Hz Single Phase 220/230V, 2 Wire Motor (PSC)

Model	HP	S.F	Full Load		Max. S.F. Load		Efficiency %		Power Factor %		Locked RotorAmps	Capacitor Value (μF)	Max. Down Thrust load (lbs)
			A	W	A	W	S.F.	F.L.	S.F.	F.L.			
E4K-S05W	0.5	1.6	3.4	730	4.3	960	62	51	97	92	18	25	300
E4K-S07W	0.75	1.5	4.7	998	5.8	1300	61	56	95	92	25	30	300
E4K-S10W	1	1.4	6.2	1306	7.5	1650	63	57	95	91	33	35	650
E4K-S15W	1.5	1.3	9	1931	10.5	2300	65	62	97	95	45	45	650

60Hz Single Phase 220/230V, 3 Wire Motor (CSCR)

Model	HP	S.F	Full Load		Max. S.F. Load		Efficiency %		Power Factor %		Locked RotorAmps	Capacitor Value (μF)		Max. Down Thrust load (lbs)
			A	W	A	W	S.F.	F.L.	S.F.	F.L.		Start	Run	
E4K-S05S	0.5	1.6	4.2	796	5.5	1120	54	50	86	78	23	60	10	300
E4K-S07S	0.75	1.5	5.3	1141	6.9	1550	61	56	88	83	32	60	15	300
E4K-S10S	1	1.4	6.4	1412	8.3	1825	63	57	89	85	39	100	20	650
E4K-S15S	1.5	1.3	8.8	1994	11.5	2390	65	62	86	83	46	100	20	650
E4K-S20S	2	1.15	10.7	2236	12.3	2453	70	66	93	92	54	125	30	650
E4K-S30S	3	1.15	15.5	3530	18.5	4035	69	69	97	97	85	150	45	1500
E4K-S50S	5	1.15	25.5	5770	31	6634	69	69	98	98	120	250	80	1500

60Hz Three Phase 220/230V, Motor (DOL)

Model	HP	S.F	Full Load		Max. S.F. Load		Efficiency %		Power Factor %		Locked RotorAmps	Max. Down Thrust load(lbs)
			A	W	A	W	S.F.	F.L.	S.F.	F.L.		
E4K-S05TE	0.5	1.6	2.5	590	3	870	68	63	76	62	15.5	300
E4K-S07TE	0.75	1.5	3.2	825	3.9	1170	70	68	78	66	20	300
E4K-S10TE	1	1.4	4	1100	4.8	1460	71	71	80	70	26.9	650
E4K-S15TE	1.5	1.3	5	1490	6	1910	74	74	83	76	34	650
E4K-S20TE	2	1.25	6.8	2180	8.2	2720	73	73	86	80	45	650
E4K-S30TE	3	1.15	9.5	3010	11	3450	74	74	81	78	62	1500
E4K-S50TE	5	1.15	16	5100	18	5830	73	73	84	81	105	1500
E4K-S55TE	5.5	1.15	18.2	5650	20.6	6540	73	73	80	78	115	1500
E4K-S75TE	7.5	1.15	23	7400	26.8	8460	75	75	83	81	165	1500
E4K-S100TE	10	1.15	31	10000	35	11450	75	74	88	86	230	1500

Technical Details

60Hz Three Phase 380V, 3 Wire Motor (DOL)

Model	HP	S.F	Full Load		Max. S.F. Load		Efficiency %		Power Factor %		Locked RotorAmps	Max. Down Thrust load(lbs)
			A	W	A	W	S.F.	F.L.	S.F.	F.L.		
E4K-S05T	0.5	1.6	1.5	590	2.2	870	68	63	76	62	9.7	300
E4K-S07T	0.75	1.5	2	825	2.6	1170	70	68	78	66	12	300
E4K-S10T	1	1.4	2.4	1100	2.9	1460	71	71	80	70	16.5	650
E4K-S15T	1.5	1.3	3	1490	3.7	1910	74	74	83	76	20	650
E4K-S20T	2	1.25	4.1	2180	5	2720	73	73	86	80	28.5	650
E4K-S30T	3	1.15	5.9	3010	6.8	3450	74	74	81	78	38	1500
E4K-S50T	5	1.15	9.8	5100	11	5830	73	73	84	81	65	1500
E4K-S55T	5.5	1.15	11	5650	12.2	6540	73	73	80	78	70	1500
E4K-S75T	7.5	1.15	14	7400	16	8460	75	75	83	81	98	1500
E4K-S100T	10	1.15	19.5	10000	21.2	11450	75	74	88	86	140	1500

60Hz Three Phase 460V, 3 Wire Motor (DOL)

Model	HP	S.F	Full Load		Max. S.F. Load		Efficiency %		Power Factor %		Locked RotorAmps	Max. Down Thrust load(lbs)
			A	W	A	W	S.F.	F.L.	S.F.	F.L.		
E4K-S05TM	0.5	1.6	1.3	590	1.6	870	68	63	76	62	7.5	300
E4K-S07TM	0.75	1.5	1.7	825	2	1170	70	68	78	66	11	300
E4K-S10TM	1	1.4	2	1100	2.5	1460	71	71	80	70	13.5	650
E4K-S15TM	1.5	1.3	2.5	1490	3.2	1910	74	74	83	76	16.8	650
E4K-S20TM	2	1.25	3.4	2180	4.2	2720	73	73	86	80	23.5	650
E4K-S30TM	3	1.15	4.9	3010	5.6	3450	74	74	81	78	32	1500
E4K-S50TM	5	1.15	8	5100	9	5830	73	73	84	81	55	1500
E4K-S55TM	5.5	1.15	9.3	5650	10.2	6540	73	73	80	78	60	1500
E4K-S75TM	7.5	1.15	11.5	7400	13.5	8460	75	75	83	81	80	1500
E4K-S100TM	10	1.15	16	10000	17.4	11450	75	74	88	86	115	1500

4” Water Filled Rewindable Motors

Technical Specifications		50 Hz	60 Hz
Nominal Dia		4” Motor (100mm)	4” Motor
Max. Outer Dia		95mm	3.74 Inches
Power Range	1Ph	0.37 to 2.2 kW	0.5 to 3 HP
	3Ph	0.37 to 7.5 kW	0.5 to 10 HP
Version	1Ph	220 / 230 V - 50Hz	220/230V, 60Hz, A.C Supply
	3Ph	380 - 415 V - 50Hz	220/230/380/460V, 60Hz, A.C Supply
Nominal Speed		2900 rpm	3450 rpm
Class of Insulation		Y	Y
Degree of protection		IP 58	IP 58
Direction of rotation		Counter-clock wise	Counter-clock wise
Type of duty		S1 (Continues)	S1 (Continues)
Minimum cooling flow		0.15 m/sec	0.5 ft/sec
Max. Liquid temp.		33° C	33° C (91.4°F)
starts per hour		20 Times	20 Times
Method of starting	1Ph	Capacitor Start Capacitor Run (CSCR)	Capacitor Start Capacitor Run
	3Ph	Direct On Line (DOL)	(CSCR) Direct On Line (DOL)
Cable lead-out		Permanently Connected 3 & 4 Core PVC Flat Cable	Permanently Connected 3 & 4 Core PVC Flat Cable

Materials of Construction	A4C	A4S
Upper & Lower Housing	CI, FG 200	Casted SS 304
Stator Shell	SS 202	SS 304
Thrust Pad	CARBON / TEFLON	CARBON / TEFLON
Thrust Bearing	CI, FG 200/ SS 420	SS 304 / SS 420
Diaphragm	NITRILE RUBBER	NITRILE RUBBER
Motor Base	CI, FG 200	SS 304
Upper housing shell	CI, FG 200	SS 304
Shaft	SS 420 / 431	SS 420 / 431
Sleeve	SS 410	SS 410

Features

- Easy to dismantle & repair
- High Operating Efficiency
- Specially designed 3 layered Insulation (Polyster+2BOPP) winding wire for better thermal protection
- Spl. Magnet provision at motor base to prevent from free metal particles
- Mounting dimensions as per NEMA standard
- Kingsburry type Thrust bearing to withstand high axial loads
- Spring action pressure compensating Diaphragm
- Specially designed forged MS stator end rings
- Low Voltage motors can be supplied, on request

Cross Sectional View

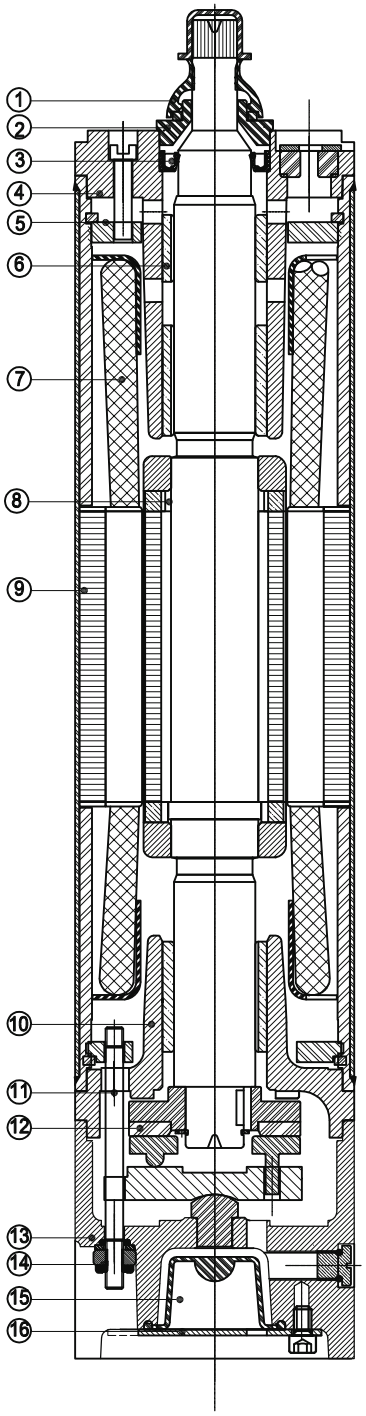

NO.	PART NAME	MATERIAL
1	SAND SLINGER	NITRILE RUBBER
2	SAND COVER	SS 304
3	OIL SEAL	NITRILE RUBBER
4	ADAPTOR	SS 304
5	FLANGE	MILD STEEL
6	BEARING BUSH	BRONZE LTB-4
7	WINDING WIRE	PVC+BOPP+COPPER
8	ROTOR	STAMPING-CRNO M47 SHAFT- SS
9	STATOR	STAMPING-CRNO M47 PIPE- SS 304
10	LOWER HOUSING	SS 304
11	STUD	SS 304
12	THRUST BEARING WITH LOOSE SEGMEMT	CARBON + SS
13	MOTOR BASE	SS 304
14	FASTENERS	SS 304
15	DIAPHRAGM	NITRILE RUBBER
16	MOTOR BASE PLATE	SS 410

Technical Details

50Hz, Single Phase, 230V Water Filled Motor (CSCR)

Model	kW	HP	Full load Current (A)	Starting Current (A)	Eff. (%)	P.F. cosØ	Max. Down thrust Load (N)	Starting Torque (Nm)	Torque (Nm)
A4S-03S	0.37	0.5	5.3	10.4	42	0.80	3000	2	1.2
A4S-05S	0.55	0.75	6.2	13.6	45	0.80	3000	2.9	1.8
A4S-07S	0.75	1	7.5	17.6	50	0.90	3000	4.1	2.5
A4S-11S	1.1	1.5	10.5	21.1	53	0.90	3000	6.1	3.7
A4S-15S	1.5	2	13.8	26.4	55	0.90	3000	8.3	4.9
A4S-22S	2.2	3	19.8	39.9	60	0.90	6500	13.3	7.4

50Hz, Three Phase, 380 - 415V Water Filled Motor (D.O.L.)

Model	kW	HP	Full load Current (A)	Starting Current (A)	Eff. (%)	P.F. cosØ	Max. Down thrust Load (N)	Starting Torque (Nm)	Torque (Nm)
A4S-03T	0.37	0.5	3.25	5.2	60	0.75	3000	2.2	1.2
A4S-05T	0.55	0.75	3.5	9.3	60	0.75	3000	3.4	1.9
A4S-07T	0.75	1	3.75	11.1	61	0.75	3000	4.5	2.5
A4S-11T	1.1	1.5	4	13	63	0.75	3000	6.7	3.7
A4S-15T	1.5	2	4.8	19.5	67	0.80	3000	9	5
A4S-22T	2.2	3	6.9	28	69	0.80	6500	14.1	7.5
A4S-30T	3	4	9	40.2	70	0.80	6500	19	10
A4S-37T	3.7	5	10.6	48	70	0.82	6500	22	12.4
A4S-40T	4	5.5	11	51	71	0.82	6500	23	13.1
A4S-55T	5.5	7.5	15.5	87.8	72	0.82	6500	33.7	18.7
A4S-75T	7.5	10	19.8	119	72	0.82	6500	45.5	25

Dimensional Details

Model	kW	HP	Cable Size (mm)	Cable Length (m)	Height (mm)	Net Weight (kg)
A4S-03S	0.37	0.5	1.0	2.75	472.5	16.6
A4S-05S	0.55	0.75	1.5	2.75	492.5	17.4
A4S-07S	0.75	1	1.5	2.75	512.5	19
A4S-11S	1.1	1.5	12.5	2.75	547.5	20
A4S-15S	1.5	2	12.5	2.75	639.5	22
A4S-22S	2.2	3	12.5	2.75	662.5	25.4
A4S-03T	0.37	0.5	1.0	2.75	472.5	15.5
A4S-05T	0.55	0.75	1.0	2.75	492.5	18
A4S-07T	0.75	1	1.0	2.75	512.5	19.5
A4S-11T	1.1	1.5	1.0	2.75	547.5	20.5
A4S-15T	1.5	2	1.0	2.75	639.5	22.5
A4S-22T	2.2	3	1.5	2.75	662.5	26
A4S-30T	3	4	1.5	2.75	722.5	28
A4S-37T	3.7	5	12.5	2.75	762.5	31
A4S-40T	4	5.5	2.5	2.75	762.5	31
A4S-55T	5.5	7.5	2.5	3.20	852.5	36
A4S-75T	7.5	10	2.5	3.20	1120.0	43

Replace the 3rd digit in model name with‘C’ Cast Iron Construction.

In view of continuous improvements in our design and process, the information, dimensions and specifications given herein are subject to change without notice.

Technical Details

60Hz, Single Phase, 220 / 230V 3Wire Motor (CSCR)

Model	kW	HP	Full load Current (A)	Eff. (%)	P.F. cosØ	Max. Down thrust Load (N)	Cable Size (mm)	Cable Length (m)	Height (mm)	Net Weight (kg)
A4S-S05S	0.37	0.5	9.3	58	0.57	3000	1.5	2.75	472.5	16.6
A4S-S07S	0.55	0.75	12.4	63	0.59	3000	1.5	2.75	492.5	17.4
A4S-S10S	0.75	1	14.9	65	0.68	3000	1.5	2.75	512.5	19
A4S-S15S	1.1	1.5	18.7	68	0.71	3000	2.5	2.75	547.5	20
A4S-S20S	1.5	2	20.9	71	0.83	3000	2.5	2.75	639.5	22
A4S-S30S	2.2	3	27.6	70	0.90	6500	2.5	2.75	662.5	25.4

60Hz, Three Phase, 220/230V Motor (D.O.L.)

Model	kW	HP	Full load Current (A)	Eff. (%)	P.F. cosØ	Max. Down thrust Load (N)	Cable Size (mm)	Cable Length (m)	Height (mm)	Net Weight (kg)
A4S-S05TD	0.37	0.5	2.3	65	0.75	3000	1.5	2.75	472.5	17
A4S-S07TD	0.55	0.75	3.1	67	0.77	3000	1.5	2.75	492.5	18
A4S-S10TD	0.75	1	4.0	70	0.77	3000	1.5	2.75	512.5	19.5
A4S-S15TD	1.1	1.5	5.2	74	0.79	3000	1.5	2.75	547.5	20.5
A4S-S20TD	1.5	2	7.5	72	0.79	3000	1.5	2.75	639.5	22.5
A4S-S30TD	2.2	3	10.1	73	0.78	6500	1.5	2.75	662.5	26
A4S-S40TD	3	4	12.3	74	0.80	6500	2.5	2.75	722.5	28
A4S-S50TD	3.7	5	16.3	76	0.80	6500	2.5	2.75	762.5	31
A4S-S55TD	4	5.5	18.8	76	0.74	6500	2.5	2.75	762.5	31
A4S-S75TD	5.5	7.5	24.5	76	0.75	6500	2.5	3.2	852.5	36

60Hz, Three Phase, 380V Motor (D.O.L.)

Model	kW	HP	Full load Current (A)	Eff. (%)	P.F. cosØ	Max. Down thrust Load (N)	Cable Size (mm)	Cable Length (m)	Height (mm)	Net Weight (kg)
A4S-S05T	0.37	0.5	1.3	65	0.75	3000	1.5	2.75	472.5	17
A4S-S07T	0.55	0.75	1.8	67	0.77	3000	1.5	2.75	492.5	18
A4S-S10T	0.75	1	2.3	70	0.77	3000	1.5	2.75	512.5	19.5
A4S-S15T	1.1	1.5	3	74	0.79	3000	1.5	2.75	547.5	20.5
A4S-S20T	1.5	2	4.3	72	0.79	3000	1.5	2.75	639.5	22.5
A4S-S30T	2.2	3	5.8	73	0.78	6500	1.5	2.75	662.5	26
A4S-S40T	3	4	7.1	74	0.8	6500	2.5	2.75	722.5	28
A4S-S50T	3.7	5	9.4	76	0.8	6500	2.5	2.75	762.5	31
A4S-S55T	4	5.5	10.8	76	0.74	6500	2.5	2.75	762.5	31
A4S-S75T	5.5	7.5	14.1	76	0.75	6500	2.5	3.2	852.5	36

60Hz, Three Phase, 440/460V Motor (D.O.L.)

Model	kW	HP	Full load Current (A)	Eff. (%)	P.F. cosØ	Max. Down thrust Load (N)	Cable Size (mm)	Cable Length (m)	Height (mm)	Net Weight (kg)
A4S-S05TM	0.37	0.5	1.1	65	0.75	3000	1.5	2.75	472.5	17
A4S-S07TM	0.55	0.75	1.6	67	0.77	3000	1.5	2.75	492.5	18
A4S-S10TM	0.75	1	2.0	70	0.77	3000	1.5	2.75	512.5	19.5
A4S-S15TM	1.1	1.5	2.6	74	0.79	3000	1.5	2.75	547.5	20.5
A4S-S20TM	1.5	2	3.7	72	0.79	3000	1.5	2.75	639.5	22.5
A4S-S30TM	2.2	3	5.0	73	0.78	6500	1.5	2.75	662.5	26
A4S-S40TM	3	4	6.2	74	0.80	6500	2.5	2.75	722.5	28
A4S-S50TM	3.7	5	8.2	76	0.80	6500	2.5	2.75	762.5	31
A4S-S55TM	4	5.5	9.4	76	0.74	6500	2.5	2.75	762.5	31
A4S-S75TM	5.5	7.5	12.3	76	0.75	6500	2.5	3.2	852.5	36

Replace the 3rd digit in model name with‘C’ Cast Iron Construction.

In view of continuous improvements in our design and process, the information, dimensions and specifications given herein are subject to change without notice.

6” Water Filled Rewindable Motors

Technical Specifications	50 Hz	60 Hz
Nominal Dia	6” Motor (150mm)	6” Motor
Max. Outer Dia	144mm	5.67 Inches
Power Range	4 to 45 kW	5.5 to 50 HP
Version	3Ph380-415V, 50Hz, A.C. Supply	230/380/440/460V, 60 Hz, A.C. Supply
Nominal Speed	2900 rpm	3450 rpm
Class of Insulation	Y	Y
Degree of protection	IP58 / IP68	IP 58 / IP 68
Direction of rotation	Counter-clock Wise	Counter-clock Wise
Type of duty	S1 (Continues)	S1 (Continues)
Minimum cooling flow	0.15 m/sec	0.5 ft/sec
Max. Liquid temp.	33° C / 70° C (PE2-PA Winding)	33° C (91.4°F) / 70° C (PE2-PA Winding)
starts per hour	20 Times	20 Times
Method of starting	4.0kW to 45kW Direct On Line (D.O.L.)	5.5 kW to 7.5 kW Direct On Line (D.O.L.)
	5.5kW to 45kW Star Delta (S.D.)	10HP to60HP Star Delta (DOL / S.D.)
Cable leadout type	Permanently Connected 3 & 4 Core PVC Flat Cable	Permanently Connected 3 & 4 Core PVC Flat Cable

Materials of Construction	A6C	A6S	A6T
Upper & Lower Housing	CI,FG 200 / 260	Casted SS 304	Casted SS 316
Stator Shell	SS 202	SS 304	SS 316
Thrust Pad	CARBON / TEFLON	CARBON / TEFLON	CARBON / TEFLON
Thrust Bearing	CI, FG 200/ SS 420	SS 304 / SS 420	SS 316 / SS 420
Diaphragm	NITRILE RUBBER	NITRILE RUBBER	NITRILE RUBBER
Motor Base	CI, FG 200/260	SS 304	SS 316
Upper Housing Shell	CI, FG 200/260	CI, FG 200/260	CI, FG 200/260
Shaft	SS 420/431	SS 420/431	SS 420/431
Sleeve	SS 410	SS 410	SS 410

Features

- Easy to dismantle & repair
- High Operating Efficiency
- Specially designed 3 layered Insulation (Polyster+2BOPP) winding wire for better thermal protection
- Spl. Magnet provision at motor base to prevent from free metal particles
- Mounting dimensions as per NEMA standard
- Kingsburry type Thrust bearing to withstand high axial loads
- Spring action pressure compensating Diaphragm
- Specially designed forged MS stator end rings
- On request, Motors can be supplied with PE2-PA winding wire for high temp. applications.
- Motors with Mechanical Seal & PT sensors available, on request

A6S A6C A6CF

Cross Sectional View

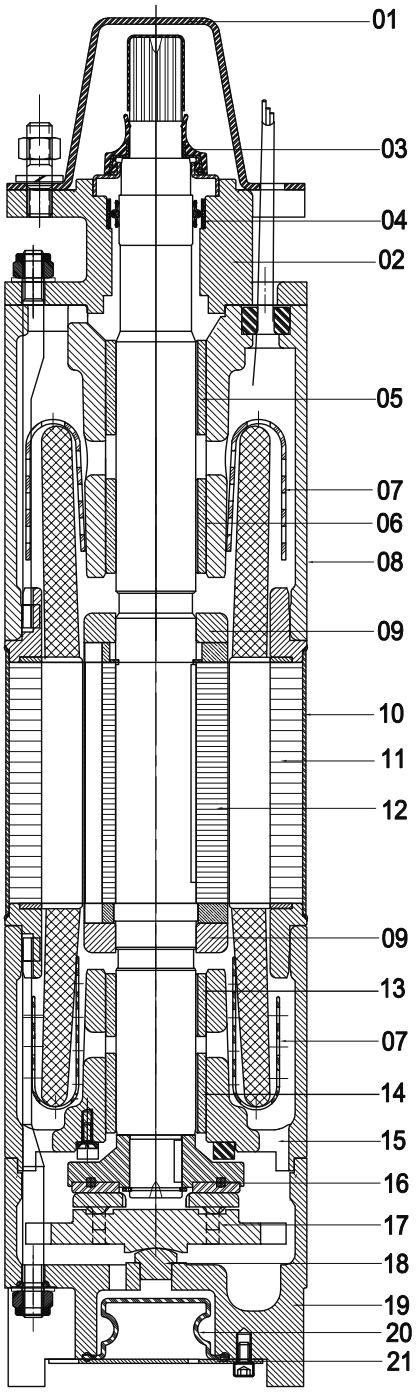

NO.	PART NAME	MATERIAL
1	PROTECTION CLAMP	MS
2	ADAPTOR	CI,FG-260
3	SAND SLINGER	NITRILE RUBBER
4	OIL SEAL	NITRILE RUBBER+SS
5	RUBBER BUSH	NITRILE RUBBER+SS
6	BEARING BUSH	LTB-4
7	WINDING CAP	LDPE
8	UPPER HOUSING	CI,FG-260
9	BALANCE RING	CI,FG-150
10	STATOR TUBE	SS- 202
11	STATOR	STAMPING-CRNO M-47
12	ROTOR	STAMPING-CRNO M-47
13	RUBBER BUSH	NITRILE RUBBER+SS
14	BEARING BUSH	LTB-4
15	LOWER HOUSING	CI,FG-260
16	T.B.PLATE	CI+CARBON
17	THRUST BEARING BASE	SS- 420
18	ROCKER SUPPORT	SS- 410
19	MOTOR BASE	CI,FG-260
20	DAIPHRAGM	NITRILE RUBBER
21	MOTOR BASE PLATE	SS- 410

Technical Details

50Hz, Three Phase 380-415V, Water Filled Motor (D.O.L.& S.D.)

Model	kW	HP	Full load Current (A)	Starting Current (A)	Eff. (%)	P.F. cosØ	Max. Down thrust Load (N)	Starting Torque (Nm)	Torque (Nm)
A6C-40T	4	5.5	10	43	73	0.75	15500	20	14
A6C-45T	4.5	6	12	48	75	0.75	15500	21	15
A6C-55T	5.5	7.5	14.5	52	77	0.75	15500	24	18
A6C-75T	7.5	10	19.5	70	78	0.78	15500	27	25
A6C-93T	9.3	12.5	25	84	79	0.78	15500	35	31
A6C-110T	11	15	29	102	80	0.80	15500	43	37
A6C-130T	13	17.5	34	118	80.5	0.80	15500	51	43
A6C-150T	15	20	39	148	81	0.80	15500	62	49
A6C-185T	18.5	25	45	188	82	0.82	15500	98	61
A6C-220T	22	30	54	225	82	0.82	15500	118	74
A6C-260T	26	35	66	270	82	0.83	27500	138	86
A6C-300T	30	40	72	355	82	0.83	27500	196	98
A6C-370T	37	50	85	420	82	0.82	27500	242	122
A6C-450T	45	60	96	464	82	0.82	27500	393	150

60Hz, Three Phase, 220/230V Water filled motor

Model	kW	HP	Full load Current (A)	Eff. (%)	P.F. cosØ	Max. Down thrust Load (N)	Cable Size (mm)	Cable Length (m)	Height (mm)	Net Weight (kg)
A6C-S55TE	4	5.5	17.3	73	0.8	15500	2.5	2.75	646	51
A6C-S60TE	4.5	6	20.0	75	0.82	15500	2.5	2.75	661	53
A6C-S75TE	5.5	7.5	24.5	76	0.85	15500	4.0	2.75	716	59
A6C-S100TE	7.5	10	31.1	78	0.87	15500	4.0	2.75	761	65
A6C-S125TE	9.3	12.5	36.7	79	0.87	15500	6.0	2.75	791	69
A6C-S150TE	11	15	44.7	81	0.86	15500	6.0	2.75	851	76
A6C-S175TE	13	17.5	52.7	80	0.86	15500	8.0	3.25	881	79
A6C-S200TE	15	20	60.0	80	0.86	15500	8.0	3.25	931	85
A6C-S250TE	18.5	25	68.2	86	0.88	15500	10.0	3.25	981	92
A6C-S300TE	22	30	86.4	86	0.84	15500	10.0	3.25	1071	100

60Hz, Three Phase, 380V Water filled motor

Model	kW	HP	Full load Current (A)	Eff. (%)	P.F. cosØ	Max. Down thrust Load (N)	Cable Size (mm)	Cable Length (m)	Height (mm)	Net Weight (kg)
A6C-S55T	4	5.5	9.5	73	0.8	15500	2.5	2.75	646	51
A6C-S60T	4.5	6	11	75	0.82	15500	2.5	2.75	661	53
A6C-S75T	5.5	7.5	13.5	76	0.85	15500	4.0	2.75	716	59
A6C-S100T	7.5	10	17.1	78	0.87	15500	4.0	2.75	761	65
A6C-S125T	9.3	12.5	20.2	79	0.87	15500	6.0	2.75	791	69
A6C-S150T	11	15	24.6	81	0.86	15500	6.0	2.75	851	76
A6C-S175T	13	17.5	29	80	0.86	15500	8.0	3.25	881	79
A6C-S200T	15	20	33	80	0.86	15500	8.0	3.25	931	85
A6C-S250T	18.5	25	37.5	86	0.88	15500	10.0	3.25	981	92
A6C-S300T	22	30	47.5	86	0.84	15500	10.0	3.25	1071	100
A6C-S350T	26	35	55.3	84	0.84	27500	16.0	3.25	1152	110
A6C-S400T	30	40	65	84	0.84	27500	16.0	3.25	1236	128
A6C-S500T	37	50	83	83	0.82	27500	16.0	4.00	1359	138
A6C-S600T	60	45	100	83	0.82	27500	16.0	4.00	1415	148

Replace the 3rd digit in model name with ‘S’ SS304 ‘T’ SS316 Construction.
In view of continuous improvements in our design and process, the information, dimensions and specifications given herein are subject to change without notice.

Technical Details

60Hz, Three Phase, 460V Water filled motor

Model	kW	HP	Full load Current (A)	Eff. (%)	P.F. cosØ	Max. Down thrust Load (N)	Cable Size (mm)	Cable Length (m)	Height (mm)	Net Weight (kg)
A6C-S55TM	4	5.5	8.6	73	0.8	15500	2.5	2.75	646	51
A6C-S60TM	4.5	6	10.0	75	0.82	15500	2.5	2.75	661	53
A6C-S75TM	5.5	7.5	12.3	76	0.85	15500	4.0	2.75	716	59
A6C-S100TM	7.5	10	15.5	78	0.87	15500	4.0	2.75	761	65
A6C-S125TM	9.3	12.5	18.4	79	0.87	15500	6.0	2.75	791	69
A6C-S150TM	11	15	22.4	81	0.86	15500	6.0	2.75	851	76
A6C-S175TM	13	17.5	26.4	80	0.86	15500	8.0	3.25	881	79
A6C-S200TM	15	20	30.0	80	0.86	15500	8.0	3.25	931	85
A6C-S250TM	18.5	25	34.1	86	0.88	15500	10.0	3.25	981	92
A6C-S300TM	22	30	43.2	86	0.84	15500	10.0	3.25	1071	100
A6C-S350TM	26	35	50.3	84	0.84	27500	16.0	3.25	1152	110
A6C-S400TM	30	40	59.1	84	0.84	27500	16.0	3.25	1236	128
A6C-S500TM	37	50	74	83	0.82	27500	16	4	1359	138

Dimensional Details

						A6C / A6S		A6CF / A6SF	
Model	kW	HP	Cable Size D.O.L. (sq. mm)	Cable Size S.D. (sq. mm)	Cable Length (m)	Height (mm)	Net Weight (kg)	Height (mm)	Net Weight (kg)
A6C-40T	4	5.5	4	-	2.75	646	51.0	642	46
A6C-45T	4.5	6	4	-	2.75	661	53.0	657	47
A6C-55T	5.5	7.5	4	2.5	2.75	716	59.0	677	50
A6C-75T	7.5	10	4	2.5	2.75	761	65.0	727	55
A6C-93T	9.3	12.5	6	2.5	2.75	791	69.0	762	60
A6C-110T	11	15	6	4	2.75	851	76.0	807	65
A6C-130T	13	17.5	10	4	3.25	881	79.0	857	70
A6C-150T	15	20	10	4	3.25	931	85.0	877	73
A6C-185T	18.5	25	10	4	3.25	981	92.0	932	80
A6C-220T	22	30	10	4	3.25	1071	100.0	987	89
A6C-260T	26	35	10	6	4.25	1185	105	1057	95
A6C-300T	30	40	16	6	4.25	1236	110	1132	117
A6C-370T	37	50	16	6	5.25	1312	112	1237	127
A6C-450T	45	60	16	10	5.25	1387	120	1312	138

Replace the 3rd digit in model name with ‘S’ SS304 ‘T’ SS316 Construction.

In view of continuous improvements in our design and process, the information, dimensions and specifications given herein are subject to change without notice.

8” Water Filled Rewindable Motors

AQUA Series

Technical Specifications	50 Hz	60 Hz
Nominal Dia	8” Motor (200mm)	8” Motor
Max. Outer Dia	190mm	7.5 Inches
Power Range	37 to 93 kW	50 to 125 HP
Version	3Ph380-415 V 50 Hz, A.C. Supply	380V / 440V / 460V 60 Hz, A.C. Supply
Nominal Speed	2900 rpm	3450 rpm
Class of Insulation	Y	Y
Degree of protection	IP 68	IP 68
Direction of rotation	Counter-Clock Wise	Counter-Clock Wise
Type of duty	S1 (Continues)	S1 (Continues)
Minimum cooling flow	0.5m/sec	1.6ft/sec
Max. Liquid temp.	33° C	33° C
starts per hour	10 Times	10 Times
Method of starting	37 kW - 93 kW (DOL & S.D.)	50 to 125 HP (DOL & S.D.)
Cable leadout type	3 & 4 Core PVC Flat Cable	3 & 4 Core PVC Flat Cable

Materials of Construction	A8C	A8S	A8T
Upper & Lower Housing	CI,FG 200/260	Casted SS304	Casted SS316
Stator Shell	SS 202	SS304	SS316
Thrust Pad	CARBON / TEFLON	CARBON / TEFLON	CARBON / TEFLON
Thrust Bearing	CI, FG 200/ SS 420	SS304 / SS420	SS316 / SS420
Diaphragm	NITRILE RUBBER	NITRILE RUBBER	NITRILE RUBBER
Motor Base	CI, FG 200/260	SS304	SS316
upper housing shell	CI, FG 200/260	SS304	SS316
Shaft	SS 420/431	SS 420/431	SS 420/431
Sleeve	SS 410	SS 410	SS 410

Features

- Easy to dismantle & repair
- High Operating Efficiency
- Specially designed 3 layered Insulation (Polyster+2BOPP) winding wire for better thermal protection
- Spl. Magnet provision at motor base to prevent from free metal particles
- Mounting dimensions as per NEMA standard
- Kingsburry type Thrust bearing to withstand high axial loads
- Spring action pressure compensating Diaphragm
- Specially designed forged MS stator end rings
- On request, Motors can be supplied with PE2-PA winding wire for high temp. applications.
- Motors with Mechanical Seal & PT sensors available, on request

Cross Sectional View

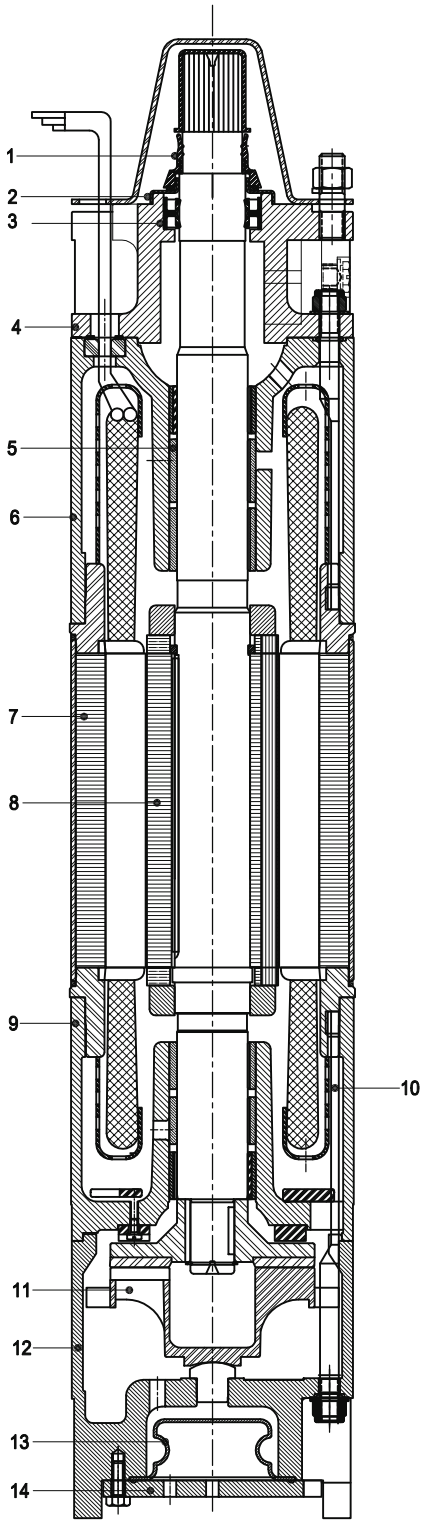

NO.	PART NAME	MATERIAL	
1	SAND SLINGER	8	ROTOR
2	SAND COVER	9	LOWER HOUSING
3	OIL SEAL	10	T-BOLT
4	ADAPTOR	11	THRUST BEARING
5	BEARING BUSH	12	MOTOR BASE
6	UPPER HOUSING	13	DIAPHRAGM
7	STATOR	14	MOTOR BASE PLATE

A8S A8C A8CF

ALGO PUMPS | MOTORS | DRIVES

Technical Details

50Hz, Three Phase, 380-415V Water Filled Motor

Model	kW	HP	Full load Current (A)	Starting Current (A)	Eff. (%)	P.F. cosØ	Max. Down thrust Load (N)	Starting Torque (Nm)	Torque (Nm)
A8C-370T	50	37	85	400	82	0.84	45500	200	122
A8C-450T	60	45	100	520	82	0.84	45500	268	149
A8C-550T	75	55	120	660	83	0.84	45500	370	180
A8C-630T	85	63	135	720	83	0.84	45500	410	206
A8C-750T	100	75	156	935	84	0.85	45500	520	246
A8C-930T	125	93	190	1265	86	0.85	45500	680	306

60Hz, Three Phase, 380V Water Filled Motor

Model	kW	HP	Full load Current (A)	Starting Current (A)	Eff. (%)	P.F. cosØ	Max. Down thrust Load (N)	Cable Size (mm)	Cable Length (m)	Height (mm)	Net Weight (kg)
A8C-S500T	37	50	78	377	84	0.88	45500	25	3.5	1236	166
A8C-S600T	45	60	92.5	470	85	0.88	45500	25	3.5	1351	188
A8C-S750T	55	75	113.8	560	85	0.88	45500	25	4	1431	203
A8C-S850T	63	85	135.5	690	86	0.89	45500	25	4	1491	213
A8C-SA00T	75	100	150	765	85	0.9	45500	25	5	1491	215
A8C-SA10T	81	110	164	833	84	0.89	55000	25	5	1570	220
A8C-SA25T	93	125	187	942	84	0.89	55000	25	5	1630	225

60Hz, Three Phase, 440/460V Water Filled Motor

Model	kW	HP	Full load Current (A)	Starting Current (A)	Eff. (%)	P.F. cosØ	Max. Down thrust Load (N)	Cable Size (mm)	Cable Length (m)	Height (mm)	Net Weight (kg)
A8C-S500TM	37	50	71	308	84	0.88	45500	25	3.5	1236	166
A8C-S600TM	45	60	84	382	85	0.88	45500	25	3.5	1351	188
A8C-S750TM	55	75	103	458	85	0.88	45500	25	4	1431	203
A8C-S850TM	63	85	120	563	86	0.89	45500	25	4	1491	213
A8C-SA00TM	75	100	127	625	85	0.9	45500	25	5	1491	215
A8C-SA10TM	81	110	134	681	84	0.89	55000	25	5	1570	220
A8C-SA25TM	93	125	153	770	84	0.89	55000	25	5	1630	225

Dimensional Details

Model	kW	HP	Cable Size D.O.L. (sq. mm)	Cable Size S.D. (sq. mm)	Cable Length (m)	Height (mm)	Net Weight (kg)
A8C-370T	50	37	16.0	10	3.5	1236.5	166.0
A8C-450T	60	45	16.0	10	3.5	1351.5	188.0
A8C-550T	75	55	25.0	25	4.0	1431.5	203.0
A8C-630T	85	63	25.0	25	4.0	1491.5	213.0
A8C-750T	100	75	35.0	25	5.0	1561	230
A8C-930T	125	93	35	35	5.0	1634	245

Replace the 3rd digit in model name with ‘S’ SS304 ‘T’ SS316 Construction.
In view of continuous improvements in our design and process, the information, dimensions and specifications given herein are subject to change without notice.

9” Water Filled Rewindable Motors

AQUA Series

Technical Specifications	50 Hz	60 Hz
Nominal Dia	9” Motor (225mm)	9” Motor (225mm)
Max. Outer Dia	225mm	9.1 Inches
Power Range	55 to 110 kW	75 to 150 HP
Version	3Ph - 380-415 V 50 Hz, A.C. Supply	3Ph - 380V/460V 60 Hz, A.C. Supply
Nominal Speed	2900 rpm	3450 rpm
Class of Insulation	F	F
Degree of protection	IP 58	IP 58
Direction of rotation	Counter-clock Wise	Counter-clock Wise
Type of duty	S1 (Continues)	S1 (Continues)
Minimum cooling flow	0.15 m/sec	1.6 ft / Sec
Max. Liquid temp.	33°/50°C	91.4 °F/122 °F
starts per hour	10 Times	10 Times
Method of starting	55 to 110 kW(DOL & S.D.)	60 to 150 HP (DOL & S.D.)
Cable leadout type	3 & 4 Core PVC Flat Cable	3 & 4 Core PVC Flat Cable
Mounting	8" NEMA	8" NEMA

Materials of Construction	A9C
Upper & Lower Housing	CI,FG 200/260
Stator Shell	SS 202
Thrust Pad	CARBON / TEFLON
Thrust Bearing	CI, FG 200/ SS 420
Diaphragm	NITRILE RUBBER
Motor Base	CI, FG 200/260
upper housing shell	CI, FG 200/260
Shaft	SS 420/431
Sleeve	SS 410

Features

- Easy to dismantle & repair
- High Operating Efficiency
- Mounting dimensions as per NEMA standard
- Kingsburry type Thrust bearing to withstand high axial loads
- Spring action pressure compensating Diaphragm
- On request, Motors can be supplied with PE2-PA winding wire for high temp. applications.
- Motors with Mechanical Seal & PT sensors available, on request

Technical Details

50Hz, Three Phase, 380-415V Water filled motor

Model	kW	HP	Full load Current (A)	Starting Current (A)	Eff. (%)	P.F. % cosØ	Max. Down thrust Load (N)	Cable Size (sq.mm)	Cable Length (m)	Height (mm)	Net Weight (kg)
A9C-930T	55	75	106	349	83	0.82	60000	25	4	1545	258
A9C-A10T	63	85	122	369	84	0.83	60000	25	4	1615	300
A9C-A30T	75	100	149	476	84	0.84	60000	25	4	1685	316
A9C-A50T	93	125	168	524	84	0.85	60000	25	4	1815	337
A9C-A65T	110	150	198	560	85	0.85	60000	35	4	1931	388

60Hz, Three Phase, 380V Water filled motor

Model	kW	HP	Full load Current (A)	Starting Current (A)	Eff. (%)	P.F. % cosØ	Max. Down thrust Load (N)	Cable Size (sq.mm)	Cable Length (m)	Height (mm)	Net Weight (kg)
A9C - S75T	55	75	112	355	83	0.83	60000	25	4	1545	258
A9C - S100T	75	100	155	482	84	0.84	60000	25	4	1685	316
A9C - S125T	93	125	188	545	84	0.84	60000	25	4	1815	337
A9C - S150T	110	150	225	588	85	0.85	60000	35	4	1931	388

Replace the 3rd digit in model name with ‘S’ SS304 ‘T’ SS316 Construction.
In view of continuous improvements in our design and process, the information, dimensions and specifications given herein are subject to change without notice.

10” Water Filled Rewindable Motors

AQUA Series

Technical Specifications	50 Hz	60 Hz
Nominal Dia	10” Motor (250mm)	10” Motor (250mm)
Max. Outer Dia	231mm	9.1 Inches
Power Range	81 to 185 kW	110 to 250 HP
Version	3Ph - 380-415 V 50 Hz, A.C. Supply	3Ph - 380V/460V 60 Hz, A.C. Supply
Nominal Speed	2900 rpm	3450 rpm
Class of Insulation	Y	Y
Degree of protection	IP 68	IP 68
Direction of rotation	Counter-clock Wise	Counter-clock Wise
Type of duty	S1 (Continues)	S1 (Continues)
Minimum cooling flow	0.5 m/sec	150 ft / Sec
Max. Liquid temp.	33° C	33° C (91.4 °F)
starts per hour	10 Times	10 Times
Method of starting	81 kW - 185 kW (DOL & S.D.)	110 HP - 250HP (DOL & S.D.)
Cable leadout type	3 & 4 Core PVC Flat Cable	3 & 4 Core PVC Flat Cable

Materials of Construction	A10C	A10S	A10T
Upper & Lower Housing	CI,FG 200/260	Casted SS304	Casted SS316
Stator Shell	SS 202	SS304	SS316
Thrust Pad	CARBON / TEFLON	CARBON / TEFLON	CARBON / TEFLON
Thrust Bearing	CI, FG 200/ SS 420	SS304 / SS420	SS316 / SS420
Diaphragm	NITRILE RUBBER	NITRILE RUBBER	NITRILE RUBBER
Motor Base	CI, FG 200/260	SS304	SS316
upper housing shell	CI, FG 200/260	SS304	SS316
Shaft	SS 420/431	SS 420/431	SS 420/431
Sleeve	SS 410	SS 410	SS 410

Features

- Easy to dismantle & repair
- High Operating Efficiency
- Mounting dimensions as per NEMA standard
- Kingsburry type Thrust bearing to withstand high axial loads
- Spring action pressure compensating Diaphragm
- On request, Motors can be supplied with PE2-PA winding wire for high temp. applications.
- Motors with Mechanical Seal & PT sensors available, on request

Technical Details

50Hz, Three Phase, 380-415V Water filled motor

Model	kW	HP	Full load Current (A)	Starting Current (A)	Eff. (%)	P.F. % cosØ	Max. Down thrust Load (N)	Cable Size D.O.L. (sq.mm)	Cable Size S.D. (sq.mm)	Cable Length (m)	Height (mm)	Net Weight (kg)
A10C-810T	81	110	153	590	85	0.89	75000	25	16	4	1370	225
A10C-930T	93	125	174	671	85	0.89	75000	25	16	4	1430	274
A10C-A10T	110	150	210	811	85	0.88	75000	25(2)	25	4	1510	299
A10C-A30T	130	175	238	919	87	0.89	75000	25(2)	25	4	1610	328
A10C-A50T	150	200	274	1059	87	0.89	75000	35(2)	35	4	1740	368
A10C-A65T	165	225	309	1196	86	0.89	75000	35(2)	35	4	1820	402
A10C-A85T	185	250	349	1348	85	0.89	75000	35(2)	35	4	1820	436

60Hz, Three Phase, 380V Water filled motor

Model	kW	HP	Full load Current (A)	Starting Current (A)	Eff. (%)	P.F. % cosØ	Max. Down thrust Load (N)	Cable Size D.O.L. (sq.mm)	Cable Size S.D. (sq.mm)	Cable Length (m)	Height (mm)	Net Weight (kg)
A10C-SA10T	81	110	166	590	86	0.87	75000	25	16	4	1370	225
A10C-SA25T	93	125	181	671	87	0.89	75000	25	16	4	1430	274
A10C-SA50T	110	150	220	811	87	0.89	75000	25(2)	25	4	1510	299
A10C-SA75T	130	175	225	919	87	0.89	75000	25(2)	25	4	1610	328
A10C-SB00T	150	200	290	1059	88	0.89	75000	35(2)	35	4	1740	368
A10C-SB25T	165	225	325	1196	88	0.89	75000	35(2)	35	4	1820	402
A10C-SB50T	185	250	355	1348	89	0.90	75000	35(2)	35	4	1820	436

60Hz, Three Phase, 460V Water filled motor

Model	kW	HP	Full load Current (A)	Starting Current (A)	Eff. (%)	P.F. % cosØ	Max. Down thrust Load (N)	Cable Size D.O.L. (sq.mm)	Cable Size S.D. (sq.mm)	Cable Length (m)	Height (mm)	Net Weight (kg)
A10C-SA10T	81	110	131	663	84	0.87	75000	25	16	4	1370	225
A10C-SA25T	93	125	149	748	84	0.89	75000	25	16	4	1430	274
A10C-SA50T	110	150	180	910	84	0.89	75000	25(2)	25	4	1510	299
A10C-SA75T	130	175	207	1050	85	0.89	75000	25(2)	25	4	1610	328
A10C-SB00T	150	200	236	1197	85	0.89	75000	35(2)	35	4	1740	368
A10C-SB25T	165	225	266	1347	85	0.89	75000	35(2)	35	4	1820	402
A10C-SB50T	185	250	297	1502	85	0.90	75000	35(2)	35	4	1820	436

Replace the 3rd digit in model name with ‘S’ SS304 ‘T’ SS316 Construction.
In view of continuous improvements in our design and process, the information, dimensions and specifications given herein are subject to change without notice.

6” - 10” Exploded View Submersible Motor

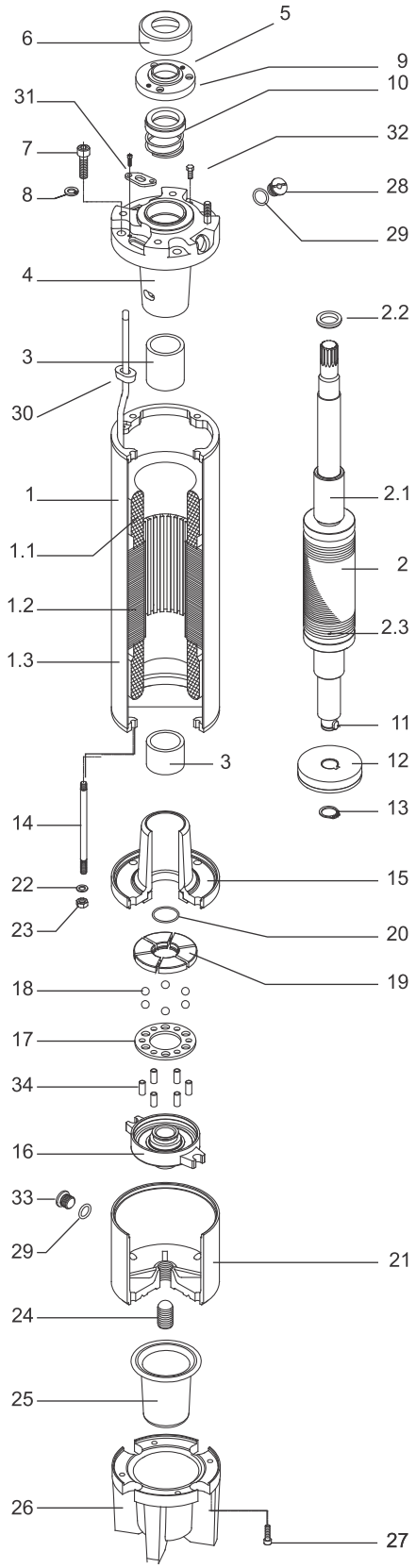

No	Part Name
1	Stator
1.1	Winding wire
1.2	Stator package
1.3	Stator shell
2	Rotor
2.1	Shaft sleeve
2.2	Balance ring
2.3	Copper ring
3	Radial bearing
4	Upper bearing body
5	Bushing
6	Slinger (sand guard)
7	Hexagon socket cap screws
8	Copper ring
9	Cover seal
10	Mechanical seal
11	Axial thrust bearing key
12	Axial thrst bearing
13	Retaining ring
14	Tie rod
15	Lower bearing body
16	Thrust bearing support
17	Ball holder
18	Thrust bearing ball
19	Tilting pads
20	O-ring
21	Thrust bearing body
22	Copper ring
23	Nut
24	Screw (thrust bearing base)
25	Membrane
26	Membrane body
27	Hexagon socket cap screws
28	Check-valve
29	O-ring
30	Cable seal
31	Seal cover
32	Nut
33	Plush ® 3/8")
34	Ball holder pins

PMSM Submersible Motors

PM Series

FEATURES

- Suitable for size of 100 mm (4"), 150 mm (6") & above bore well respectively.
- Up to 90% Motor Efficiency
- 20 to 30% Higher Efficiency than Star Rated Pump sets.
- Easy Rewindable & Repairable Water Filled Submersible Motor.
- Smooth Starting Using VFD Controller and can be Used Low Voltage Area.
- Virtually NO Maintenance Cost.
- Premium Material SS/CI Robust Construction
- Nema Standards,
- Suitable for 110 to 415 Voltages for 3-phase.
- Frequency: Upto 110 Hz / 145 Hz
- Speed: 3300 RPM / 4350 RPM

Technical Specifications

Nominal Dia		4" Motor (100mm)
Max. Outer Diameter		3.74" (95 mm)
Power Range	3Ph	1 HP to 10 HP
Nominal Speed		3300 RPM & 4500 RPM
Voltage Range	3Ph	110V to 450V, 60 Hz, A.C Supply
Class of Insulation		F
Degree of protection		IP 58
Direction of rotation		Anti-Clock wise
Type of duty		S1 (continues)
Minimum cooling flow		0.15 m/sec
Max. Liquid temp.		92°F / 120°F (33°C / 50°C)
Starts per hour		20 Times
Method of starting		1 HP to 10 HP (VFD)
Cable lead out type		3 Core Flat Cable

Technical Specifications

Nominal Dia		6" Motor (50mm)
Max. Outer Diameter		5.66" (144 mm)
Power Range	3Ph	15 HP & 20 HP
Nominal Speed		3300 RPM & 4500 RPM
Voltage Range	3Ph	110V to 450V, 60 Hz, A.C Supply
Class of Insulation		F
Degree of protection		IP 58
Direction of rotation		Anti-Clock wise
Type of duty		S1 (Continues)
Minimum cooling flow		0.15 m/sec
Max. Liquid temp.		92° F / 120° F (33° C / 50° C)
Starts per hour		20 Times
Method of starting		15 HP & 20 HP (VFD)
Cable lead out type		3 Core Flat Cable

Technical Details

Model	Motor Rated Power - P_2 (kW)	Motor Rated Power - P_2 (HP)	Motor input Power - P_1 (W)	Motor Nominal Voltsge	Max. PV Panel Power Voltage - Vmp	Current at Vmp - Imp (A)	Full Load Efficiency (%)	Full Load Power Factor	Height (mm)	Net Weight (kg)
PM4-07T	0.75	1	1200	80	111	9	79	0.83	390	12
PM4-07T	0.75	1	1200	110	148	10	79	0.83	390	12
PM4-15T	1.5	2	1800	160	222	9	81	0.83	410	12.5
PM4-22T	2.2	3	3000	230	370	10	85	0.82	440	15
PM4-37T	3.7	5	4800	380	555	10	85	0.82	490	18
PM4-55T	5.5	7.5	6750	280	407	18	87	0.84	540	20
PM4-75T	7.5	10	9000	380	555	18	87	0.84	600	24

Model	Motor Rated Power - P_2 (kW)	Motor Rated Power - P_2 (HP)	Motor input Power - P_1 (W)	Motor Nominal Voltsge	Max. PV Panel Power Voltage - Vmp	Current at Vmp - Imp (A)	Full Load Efficiency (%)	Full Load Power Factor	Height (mm)	Net Weight (kg)
PM6-110T	11	15	14400	380	555	27	90	0.85	769	57
PM6-150T	15	20	18000	380	555	36	90	0.86	841	65

ALGO PUMPS | MOTORS | DRIVES

SUBMERSIBLE PUMPSET CABLE SELECTION CHART FOR 220 VOLTAGE -SINGLE PHASE- 50 Hz

	INSTALLATION DEPTH IN MTR																					
HP	10	20	30	40	50	60	70	80	90	100	110	128	140	180	200	220	270	320	370	420	470	500
0.5	1.5	1.5	1.5	1.5	1.5	1.5	1.5	1.5	1.5	1.5	1.5	2.5	2.5	2.5	2.5	4	4	4	6	6	6	6
0.75	1.5	1.5	1.5	1.5	1.5	1.5	1.5	1.5	2.5	2.5	2.5	2.5	2.5	4	4	4	6	6	10	10	10	10
1	1.5	1.5	1.5	1.5	1.5	1.5	2.5	2.5	2.5	2.5	2.5	4	4	4	6	6	6	10	10	10	16	16
1.5	1.5	1.5	1.5	1.5	2.5	2.5	2.5	4	4	4	4	6	6	6	10	10	10	16	16	16	16	25
2	2.5	2.5	2.5	2.5	2.5	2.5	4	4	4	4	6	6	6	10	10	10	16	16	16	25	25	25
3	2.5	2.5	2.5	2.5	4	4	6	6	6	6	10	10	10	16	16	16	16	25	25	35	35	35
4	4	4	4	4	4	6	6	6	10	10	10	16	16	16	16	25	25	35	35	35	35	35
5	4	4	4	4	6	6	10	10	10	10	10	16	16	25	25	25	35	35	35	50	50	50
6	6	6	6	6	10	10	10	10	10	16	16	16	25	25	25	35	35	35	50	50	50	50
7.5	6	6	6	10	10	10	10	10	10	16	16	25	25	25	35	35	35	50	50	50	50	50
10	10	10	10	10	10	10	10	10	16	25	25	25	25	35	35	35	50	50	50	50	50	50

SUBMERSIBLE PUMPSET CABLE SELECTION CHART FOR 415 VOLTAGE DOUBLE CABLE- THREE PHASE - 50 Hz

	INSTALLATION DEPTH IN MTR																					
HP	10	20	30	40	50	60	70	80	90	100	110	128	140	180	200	220	270	320	370	420	470	500
7.5	1.5	1.5	1.5	1.5	1.5	1.5	2.5	2.5	2.5	1.5	2.5	2.5	2.5	4	4	4	4	6	6	6	10	10
10	2.5	2.5	2.5	2.5	2.5	2.5	2.5	2.5	2.5	2.5	2.5	4	4	4	6	6	6	10	10	10	10	16
12.5	4	4	4	4	4	4	4	4	4	4	4	4	6	6	6	10	10	10	16	16	16	16
15	4	4	4	4	4	4	4	4	4	4	4	4	6	6	6	10	10	10	16	16	16	16
17.5	4	4	4	4	4	4	4	4	4	4	6	6	6	10	10	10	10	16	16	16	25	25
20	4	4	4	4	4	4	4	4	4	4	6	6	6	10	10	10	10	16	16	16	25	25
22.5	6	6	6	6	6	6	6	6	6	6	6	10	10	10	10	16	16	16	25	25	25	25
25	6	6	6	6	6	6	6	6	6	6	6	10	10	10	10	16	16	16	25	25	25	25
30	6	6	6	6	6	6	6	6	6	6	10	10	10	10	16	16	16	25	25	25	35	35
35	8	8	8	8	8	8	8	10	10	10	10	10	16	16	16	25	25	25	35	35	50	50
40	8	8	8	8	8	8	8	10	10	10	10	10	16	16	16	25	25	25	35	35	50	50
45	10	10	10	10	10	10	10	10	10	10	16	16	16	25	25	25	25	35	50	50	50	50
50	10	10	10	10	10	10	10	10	10	10	16	16	16	25	25	25	25	35	50	50	50	50
60	10	10	10	10	10	10	10	10	10	16	16	16	25	25	25	25	35	50	50	50	–	–
75	16	16	16	16	16	16	16	16	16	16	16	25	25	25	35	35	50	50	50	–	–	–
85	16	16	16	16	16	16	16	16	16	25	25	25	35	35	50	50	50	–	–	–	–	–
100	16	16	16	16	16	16	16	16	16	25	25	25	35	35	50	50	50	–	–	–	–	–
125	25	25	25	25	25	25	25	25	25	25	35	35	35	50	50	–	–	–	–	–	–	–

SUBMERSIBLE PUMPSET CABLE SELECTION CHART FOR 415 VOLTAGE SINGLE CABLE - THREE PHASE - 50 Hz

	INSTALLATION DEPTH IN MTR																					
HP	10	20	30	40	50	60	70	80	90	100	110	128	140	180	200	220	270	320	370	420	470	500
0.75	1.5	1.5	1.5	1.5	1.5	1.5	1.5	1.5	1.5	1.5	1.5	1.5	1.5	1.5	1.5	1.5	1.5	1.5	1.5	1.5	1.5	1.5
1	1.5	1.5	1.5	1.5	1.5	1.5	1.5	1.5	1.5	1.5	1.5	1.5	1.5	1.5	1.5	1.5	1.5	1.5	1.5	1.5	1.5	2.5
1.5	1.5	1.5	1.5	1.5	1.5	1.5	1.5	1.5	1.5	1.5	1.5	1.5	1.5	1.5	1.5	1.5	1.5	1.5	2.5	2.5	2.5	2.5
2	1.5	1.5	1.5	1.5	1.5	1.5	1.5	1.5	1.5	1.5	1.5	1.5	1.5	1.5	1.5	1.5	2.5	2.5	2.5	2.5	2.5	4
3	1.5	1.5	1.5	1.5	1.5	1.5	1.5	1.5	1.5	1.5	1.5	1.5	1.5	2.5	2.5	2.5	2.5	4	4	4	6	6
4	2.5	2.5	2.5	2.5	2.5	2.5	2.5	2.5	2.5	2.5	2.5	2.5	2.5	2.5	2.5	4	4	4	6	6	6	6
5	2.5	2.5	2.5	2.5	2.5	2.5	2.5	2.5	2.5	2.5	2.5	2.5	2.5	4	4	4	4	6	6	10	10	10
6	4	4	4	4	4	4	4	4	4	4	4	4	4	4	4	4	6	6	6	10	10	10
7.5	4	4	4	4	4	4	4	4	4	4	4	4	4	4	6	6	6	10	10	10	16	16
10	6	6	6	6	6	6	6	6	6	6	6	6	6	6	6	10	10	10	16	16	16	16
12.5	6	6	6	6	6	6	6	6	6	6	6	6	6	10	10	10	16	16	16	25	25	25
15	6	6	6	6	6	6	8	8	8	8	8	8	8	10	10	10	16	16	16	25	25	25
17.5	6	6	6	6	6	6	8	8	8	8	8	10	10	10	16	16	16	25	25	25	35	35
20	8	8	8	8	8	8	8	8	8	8	8	10	10	10	16	16	16	25	25	25	35	35
22.5	8	8	8	8	8	8	8	8	10	10	10	10	10	16	16	16	25	25	35	35	35	50
25	8	8	8	8	8	8	8	8	10	10	10	10	10	16	16	16	25	25	35	35	35	50
30	10	10	10	10	10	10	10	10	10	10	10	16	16	16	25	25	25	35	35	50	50	50
35	16	16	16	16	16	16	16	16	16	16	16	16	16	25	25	25	35	50	50	50	–	–
40	16	16	16	16	16	16	16	16	16	16	16	16	16	25	25	25	35	50	50	50	–	–
45	16	16	16	16	16	16	16	16	16	16	16	25	25	25	35	35	35	35	50	50	–	–
50	16	16	16	16	16	16	16	16	16	16	16	25	25	25	35	35	35	35	50	50	–	–
60	25	25	25	25	25	25	25	25	25	25	25	25	25	35	35	50	50	50	–	–	–	–
75	25	25	25	25	25	25	25	25	25	25	25	35	35	50	50	50	–	–	–	–	–	–
85	50	50	50	50	50	50	50	50	50	50	50	50	50	50	–	–	–	–	–	–	–	–
100	50	50	50	50	50	50	50	50	50	50	50	50	50	50	–	–	–	–	–	–	–	–
125	50	50	50	50	50	50	50	50	50	50	50	50	50	50	–	–	–	–	–	–	–	–

ALGO
PUMPS | MOTORS | DRIVES

Group Companies in India | International Stock Hubs | Overseas Customers

33+
Years Experience

100+
Product variants

6000+
Models

80+
Countries Export

1400+
Distributors

700+
Service Centers

5
Companies under the Group

30+
Venture Partners in India & abroad

3
International Stock Hubs

3
Times Export Award Winner

National Top Exporter Award Winner

One Star Export House Status

ALGO
CONNECTING TECHNOLOGIES

ALGO Group of Companies

Algo Fluid Systems Private Limited
Survey No. 185,Ahmedabad-Mehsana Highway,
Ghumasan Road, Chandarda, Ta- Kadi,
Dist- Mehsana, Gujarat-384450.
Tel.: +91- 2764-234240 / 93164 31347
E-mail: sales@algopumps.com
Web : www.algopumps.com

Algo Hydro Tech
No:9/132-7, Kalapatti Main Road,
Kaikolapalayam, Mylampatti - Post,
Coimbatore - 641062 Tamilnadu.
M.: 9976170074
E-mail: salescbe@algopumps.com
website: www.algopumps.com

Algo Aqua Tech
43 / 2 / 2 Krushnai ware house, Manter Wadi Urulidevachi, B / h Sai Om Petrol Bunk, Pune - 412308,
Maharashtra, India | Ph.: +91 74474 61552 | E-mail: salespune@algopumps.com

Algo Pump Technick
3, 2 / part, Wahab Nagar, Sikh Village, Secundrabad, Hyderabad, Telangana - 500 009.
Ph.: +91 96555 00959 | E-mail : salesapt@algopumps.com

Algo Hydro Tech
6 Ward 11 Murari Junction Kollam Ayoor Road Mukthala Kollam Kerala 691577
Ph.: +91 90873 70074 / 96555 00360 | E-mail : saleskerala@algopumps.com

Intl. Stock Hubs : Nairobi-Kenya, Valencia-Spain